The Plutonium Reality Show

"Super Class Y vs. Class W and Class Y"
A Contest of Bioassay and Internal Dosimetry

PNNL-SA-40588

A Health Physics Professional Development Seminar
Sponsored by the Hanford Radiological Control Forum

January 28, 2004

Eugene H. Carbaugh, CHP
Program Manager
Hanford Internal Dosimetry Program
(509) 376-6632
gene.carbaugh@pnl.gov

Outline – "The Pu Reality Show"

- The Rules of Bioassay and Internal Dosimetry
- The Reigning Champions – Class W and Class Y
- Break?
- The Contender – Super Class Y
- The Impact and Implications
- Open Season for Questions and Discussion

The Rules (Basic Version)

- ICRP 30 GI Tract Model
- ICRP 30 Lung Model
- ICRP 30 Metabolic Model
- Dose Coefficients
- Basic Calculations
  - Simple dose calculation
  - Simple Intake or Bioassay Calculation
  - ALI
  - DAC

The Rules – ICRP 30 Lung Model (1979)

- Regions
  - Particle AMAD = 1 μm
- Compartments
  - Fractions & Half-times
- "Class" refers to retention in long-term pulmonary compartments
- Class D – days, t_{bio} < 10 d
- Class W – weeks

  t_{bio} = 10 to 100 d
- Class Y – years

  t_{bio} > 100 d

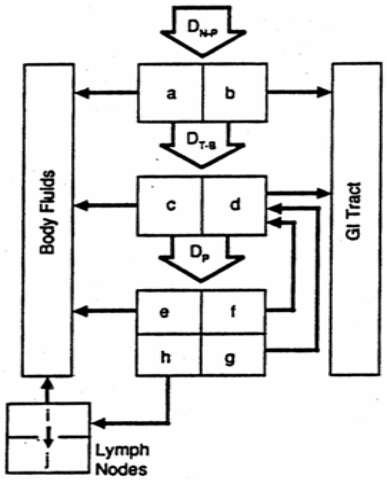

Region	Compartment	Class D T Days	Class D F	Class W T Days	Class W F	Class Y T Days	Class Y F
N-P (D_{N-P} = 0.30)	a	0.01	0.5	0.01	0.1	0.01	0.01
	b	0.01	0.5	0.40	0.9	0.40	0.99
T-B (D_{T-B} = 0.08)	c	0.01	0.95	0.01	0.5	0.01	0.01
	d	0.2	0.05	0.2	0.5	0.2	0.99
P (D_P = 0.25)	e	0.5	0.8	50	0.15	500	0.05
	f	n.a.	n.a.	1.0	0.4	1.0	0.4
	g	n.a.	n.a.	50	0.4	500	0.4
	h	0.5	0.2	50	0.05	500	0.15
L	i	0.5	1.0	50	1.0	1000	0.9
	j	-	0.0	-	0.0	-	0.1

R8812094 23 51

ICRP 30 Lung Model

^{239}Pu Lung Retention

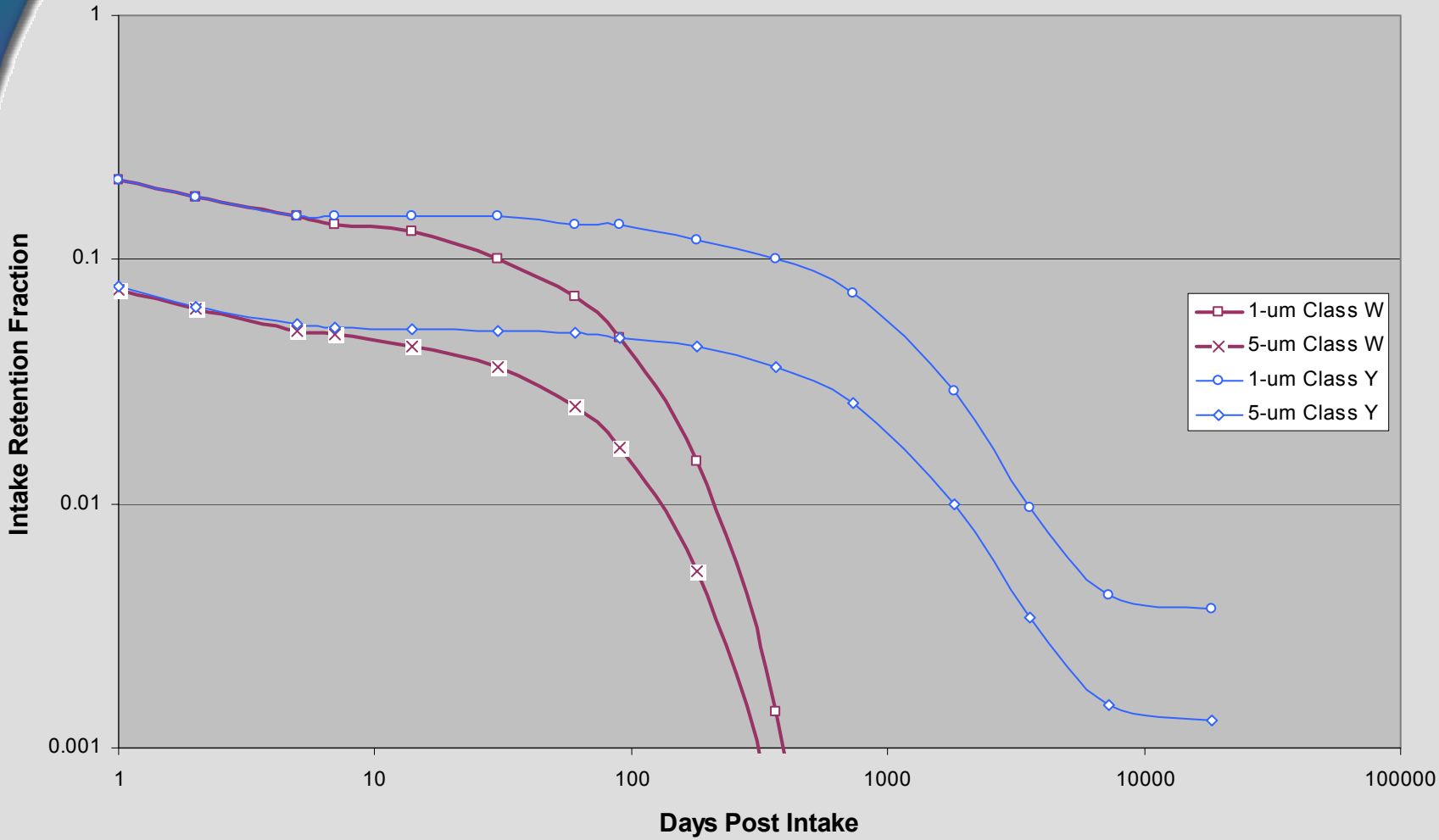

The Rules – ICRP 30 GI Tract Model (1979)

- Simple model
- Mean residence time (1/λ) in compartments
  - ST = 1 hour
  - SI = 6 hours
  - ULI = 13 hours
  - LLI = 24 hours
- Absorption to blood only in SI
- f_1 = fraction absorbed to blood
  - $=\lambda_b/(\lambda_{SI}+\lambda_b)$
- Fecal Excretion

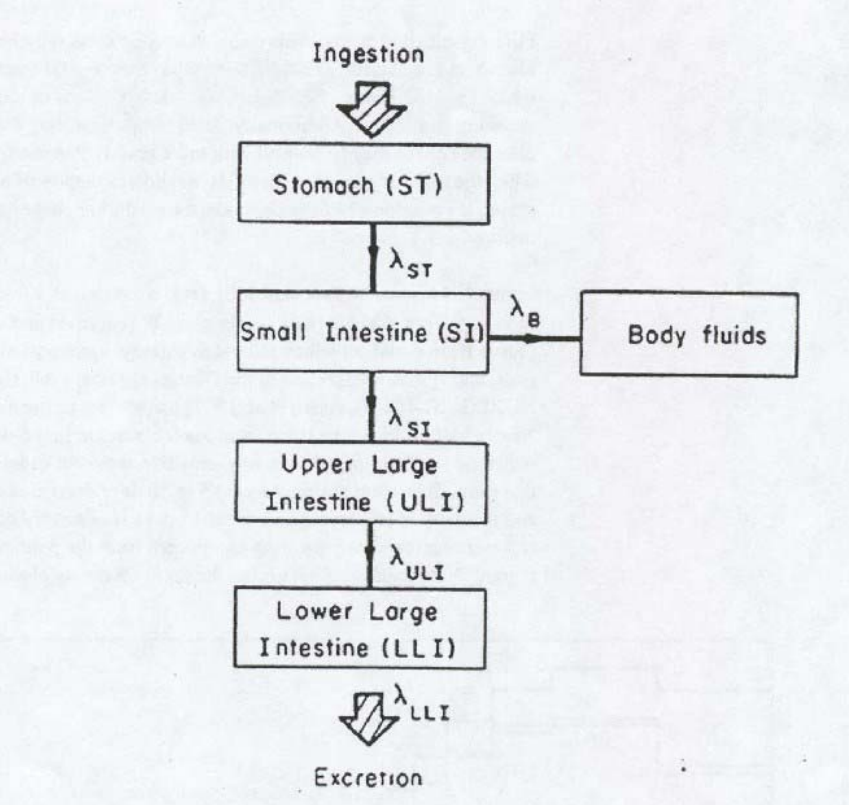

Figure C.3. Biokinetic Model for the Gastrointestinal Tract (From ICRP 30 [1979])

ICRP 30 GI Tract Model (1979)

- GI Absorption for Pu is not very significant

- f_1 values for Pu range

  Pu Nitrates: 10^{-4} (5×10^{-4})

  Pu Oxides: 10^{-5}

  "Other Forms" Ingestion: 5×10^{-4}

^{239}Pu Fecal Excretion Fraction

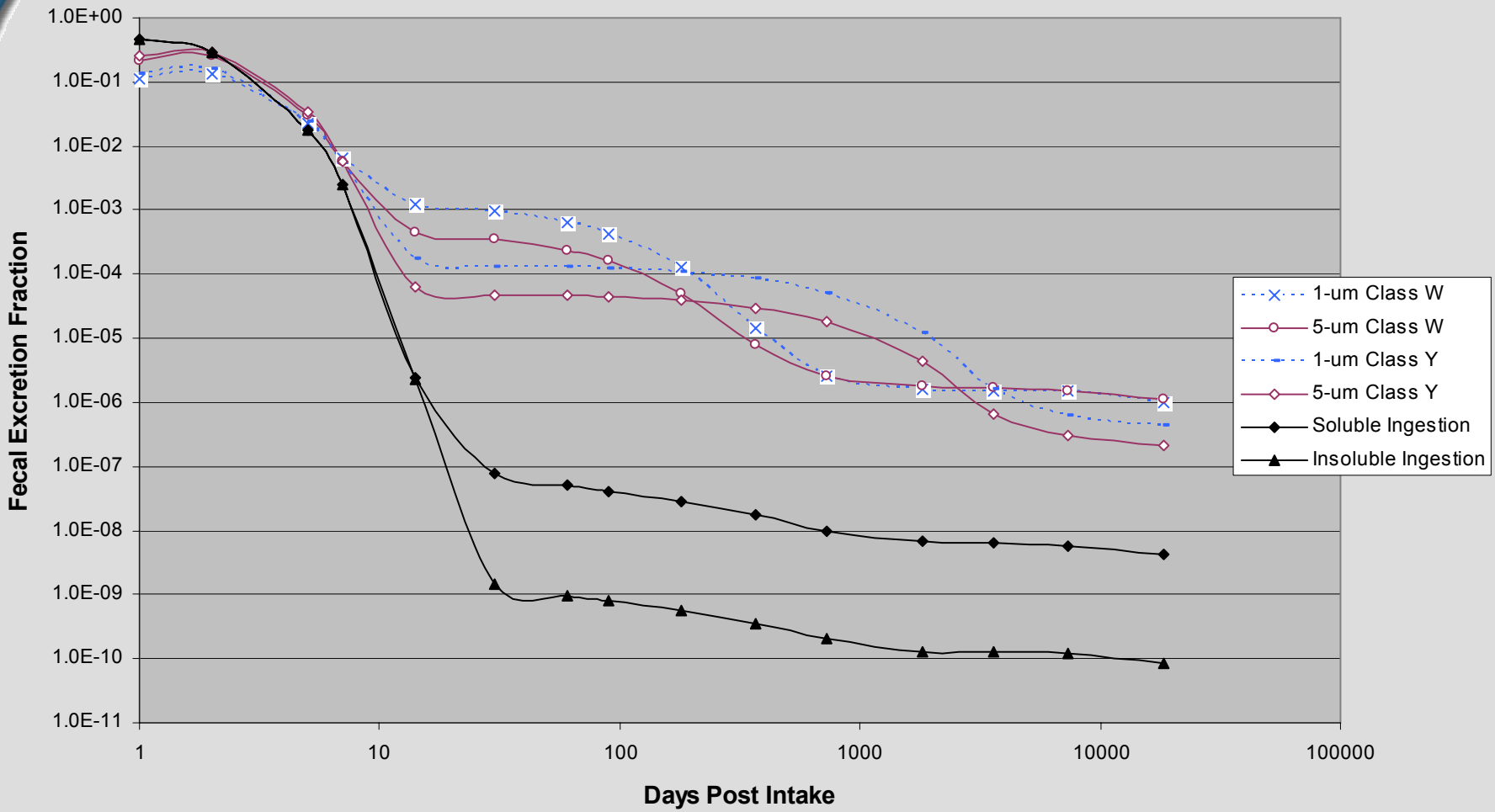

The Rules – ICRP 30 Metabolic Model

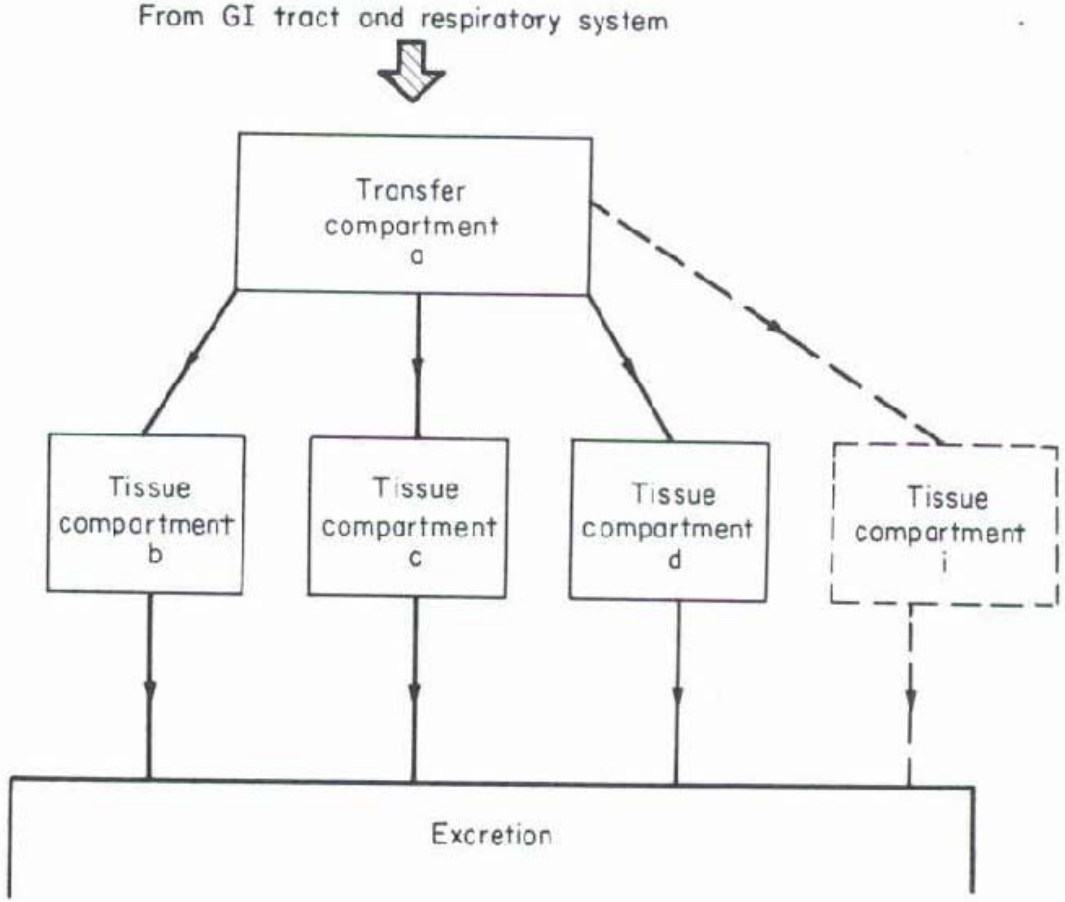

Fig. 4.1. Mathematical model usually used to describe the kinetics of radionuclides in the body: exceptions to this model are noted in the metabolic data for individual elements

The Rules – ICRP 30 Metabolic Model Part 1 (1979) → Part 4 (1988)

Uptake from blood

- 45% to Bone Surfaces
  t_{bio} =100 y → 50 y
- 45% to Liver
  t_{bio} =50 y → 20 y
- 0.035% to Testis
  t_{bio} = permanent

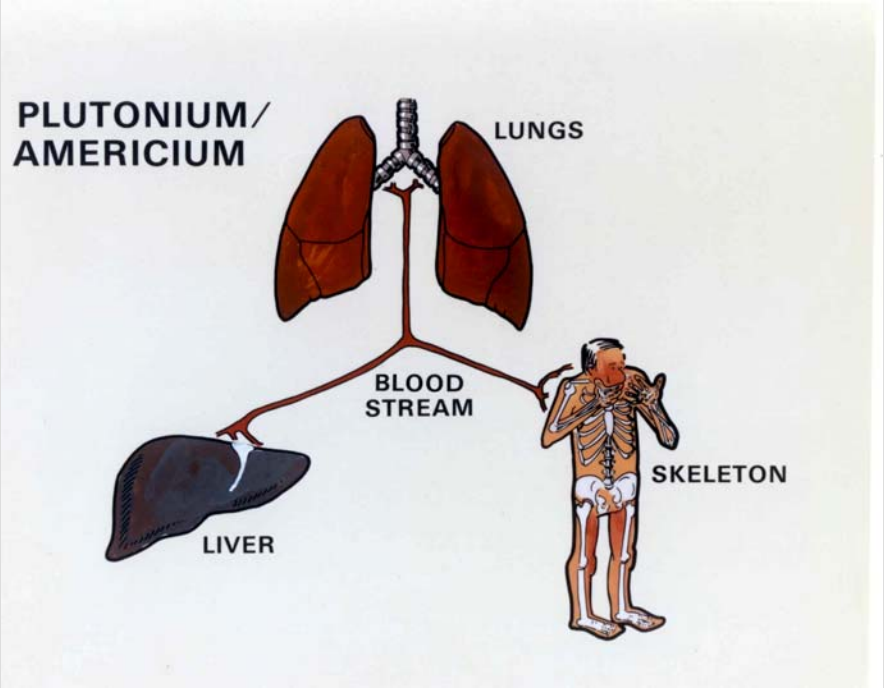

^{239}Pu Urine Excretion Fraction

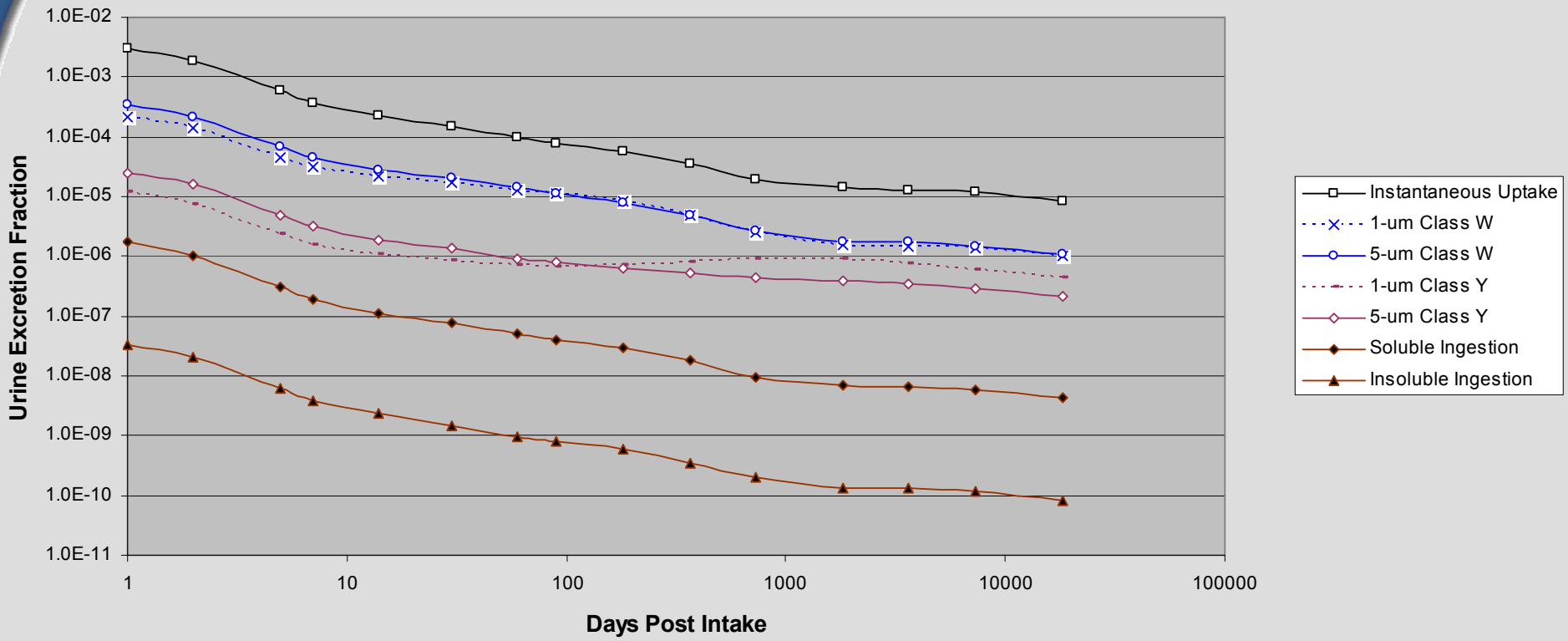

"Reality" – the Recycling Model (ICRP 67)

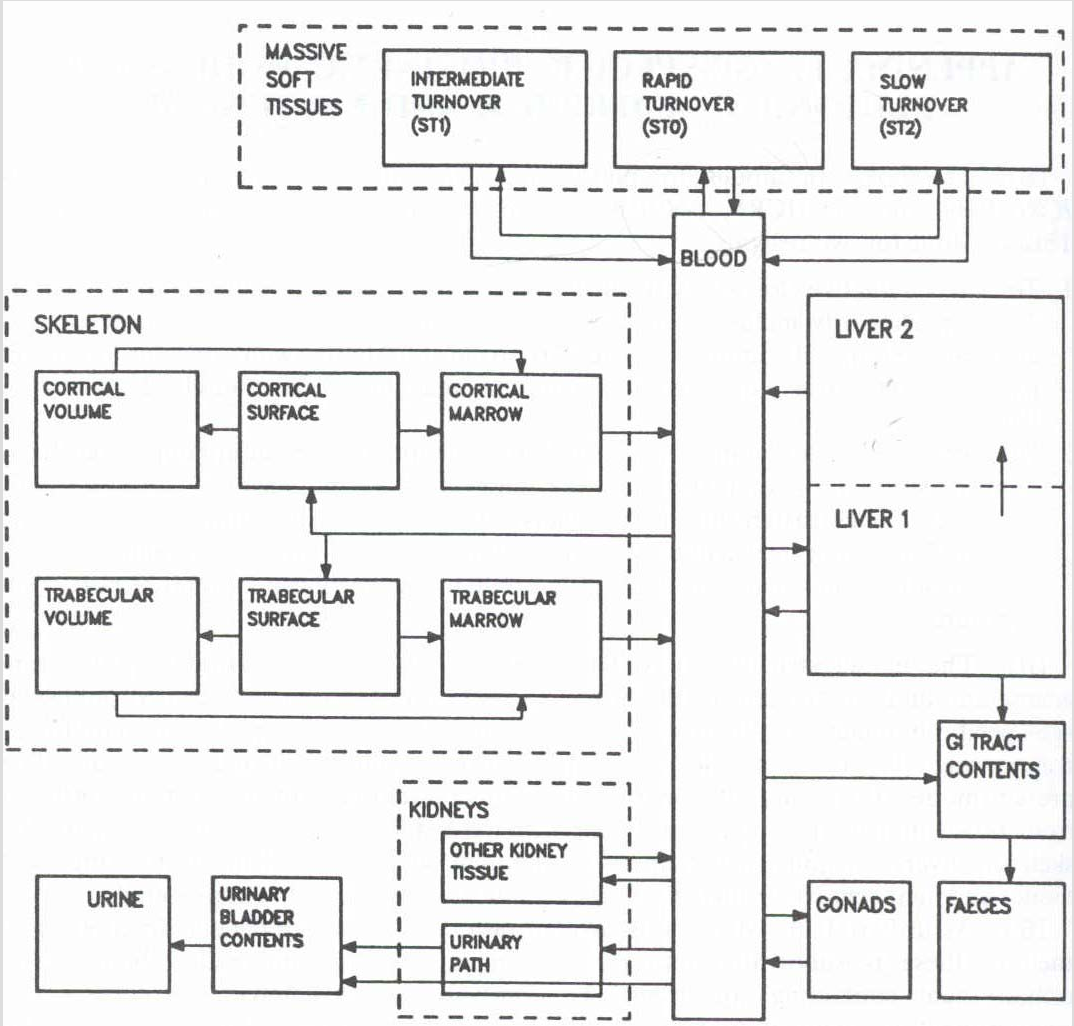

Fig. B1. Diagram of the biokinetic model for plutonium, americium and neptunium.

The Rules – Dose Calculations

- $H_{50,T}$ = CDE = committed dose equivalent
  - dose to organ/tissue over 50-y period
- $H_{50,E}$ = CEDE = committed effective dose equivalent
  - Sum of weighted tissue/organ doses
  - $\sum w_T H_{50,T}$
- "Effective dose, *E50*" is a similar term but refers to ICRP 60 tissue weighting factors
- 10 CFR 835 Dose Limits
  - 5 rem CEDE 50 rem to any organ or tissue

Organ/Tissue Weighting Factors

Tissue/Organ	***ICRP 30***	*ICRP 60*
Gonads	***0.25***	*0.20*
Breasts	***0.15***	*0.05*
Red Bone Marrow	***0.12***	*0.12*
Lungs	***0.12***	*0.12*
Thyroid	***0.03***	*0.05*
Bone Surfaces	***0.03***	*0.01*
Colon	-	*0.12*
Stomach	-	*0.12*
Bladder	-	*0.05*
Liver	-	*0.05*
Esophagus	-	*0.05*
Skin	-	*0.01*
Remainder	*0.06 for each of 5 highest*	*0.05 total with max. of 0.025 to any one*

The Rules – Dose Calculations

- 10 CFR 835 specifies the ICRP 30 values for w_T
- 10 CFR 835 does NOT specify biokinetic models
- Dosimetrists are free to use appropriate biokinetic models to the extent they are not restricted by their own procedures (technical bases)
  - Lung Model
  - GI Tract Model
  - Metabolic Models

REALITY: For intake & dose assessment

- Modify default models based on best available knowledge
- Hanford still using ICRP 30 model forms
  - Lung model
  - Metabolic models (Part 4 Pu model)
- Not using new Human Respiratory Tract Model (ICRP 66) or recycling metabolic models YET.

REALITY: For intake & dose assessment

- Particle size based on real data
- Default particle size of 5 µm AMAD for occupational exposure, based on
  - ICRP 66 = 5 µm with GSD of 2.5
  - Dorrian & Bailey (1995) = 4.4 µm
  - Recent 100-KW data of 4.6 µm with GSD of 5.8
  - Old Hanford data (ca. 1973) suggest 4 µm
- Default particle size of 1 µm AMAD for environmental (non-occupational) exposure

Rules vs. Reality

Rules	Reality
DAC Values in 10 CFR 835	Actual cases of intake
Workplace controls	Actual Dose Assessment
Safety analysis	Bioassay program design and capability
Initial indicators of dose	

Dose Coefficients for ^{239}Pu Inhalation - Federal Guidance Report No. 11, rem/nCi

	Class W	Class Y
AMAD	1-µm	1-µm
Effective	0.429	0.308
Lung	0.064	1.20
Bone Surfaces	7.81	3.04

Annual Limit on Intake, ALI

- Stochastic ALI (SALI) based on 5 rem and effective dose coefficient
- Nonstochastic ALI (NALI) based on 50 rem and limiting organ dose coefficient
  - Pu, Am = bone surfaces
- Not tabulated in 10CFR835 but reference to EPA Federal Guidance Report No. 11

$$ALI = \frac{Dose\ Limit}{Dose\ Coefficient}$$

^{239}Pu Annual Limit on Intake, Stochastic ALI

$$SALI = \frac{5\ rem}{0.429\ rem / nCi}$$

$$SALI = 11.7\ nCi$$

^{239}Pu Annual Limit on Intake, Nonstochastic ALI

$$NALI = \frac{50\ rem}{7.81\ rem / nCi}$$

$$NALI = 6.40\ nCi$$

^{239}Pu Annual Limit on Intake

- SALI = 11.7 nCi (effective)
- NALI = 6.40 nCi (bone surfaces)

- ALI is most restrictive of the SALI, NALIs

- ^{239}Pu ALI = 6.40 nCi = 0.0064 µCi

  FGR No. 11 = 0.006 µC

Derived Air Concentration, DAC

- ALI will result if 1 DAC is breathed:
  - At Reference Man “light activity” breathing rate of 20 liters/min, (1200 l/h or 1.2 m^3/h)
  - 40 hours/week & 50 weeks/yr (=2000 h)
- ALI = 2000 *DAC-hours*
- DAC = ALI / Volume of air breathed in 1 year

DAC Calculation

$$DAC = \frac{ALI}{1.2\ m^3/h \times 2000h \times 10^6\ ml/m^3}$$

$$DAC = \frac{ALI}{2.4 \times 10^9\ ml}$$

^{239}Pu DAC Calculation for Class W

$$DAC = \frac{ALI}{1.2\ m^3/h \times 2000h \times 10^6\ ml/m^3}$$

$$DAC = \frac{0.00640\ \mu Ci}{2.4 \times 10^{9}\ ml} = 2.67 \times 10^{-12}\ \mu Ci/ml$$

Comparison of ^{239}Pu DACs, µCi/ml

	Class W	Class Y
Calculated	2.67×10^{-12}	6.88×10^{-12}
FGR No. 11	3×10^{-12}	7×10^{-12}
10 CFR 835	2×10^{-12}	6×10^{-12}

Comparison of ^{239}Pu DACs µCi/ml (Bq/m_3)

	Class W	Class Y
Calculated	2.67×10^{-12} (0.099)	6.88×10^{-12} (0.255)
FGR No. 11 (= ICRP 30 Part 4)	3×10^{-12} (0.1)	7×10^{-12} (0.3)
10 CFR 835 (= ICRP 30 Part 1)	2×10^{-12} (0.08)	6×10^{-12} (0.2)

Dose Coefficients for ^{239}Pu Inhalation rem/nCi

PNNL-MA-860 /(FGR No. 11)

	Class W		Class Y	
AMAD	1-µm	5-µm	1-µm	5-µm
Effective	0.44 (0.429)	0.48	0.31 (0.308)	0.13
Lung	0.061 (0.064)	0.022	1.1 (1.20)	0.40
Bone Surfaces	8.0 (7.81)	8.8	3.1 (3.04)	1.6

Effective Dose Coefficients for Inhalation rem/nCi

(from PNNL-MA-860)

	Class W		Class Y	
	1-µm	5-µm	1-µm	5-µm
^{238}Pu	0.40	0.43	0.29	0.12
$^{239,240}Pu$	0.44	0.48	0.31	0.13
^{241}Am	0.45	0.49	0.32	0.14
^{241}Pu	0.0083	0.0091	0.0050	0.0022

Bioassay and Internal Dosimetry Program Need and Design Basis

- Demonstrate compliance with 10CFR835 dose limits
- "Must use…"
  - 10CFR835 quality factors
  - 10CFR835 tissue weighting factors
- "At liberty to use…"
  - Appropriate particle size
  - Appropriate respiratory tract model
  - Appropriate metabolic model

Simple Dose Calculation

Dose = Intake × Dose Coefficient (DCF)

√ Dose coefficients

How do we get the intake?

Intake Calculation

Intake Retention Fraction, *IRF(t)*

- fraction of intake remaining in the compartment of interest (e.g., organ, total body, urine) at time *t*
- Incorporates lung model, GI tract model, metabolic model, excretion model
- CINDY computer code

Intake Calculation

$$IRF(t) = \frac{Bioassay\,(t)}{Intake}$$

$$Intake = \frac{Bioassay(t)}{IRF(t)}$$

$$Expected\ Bioassay = Intake \times IRF(t)$$

Minimum Detectable Intake – A measure of bioassay capability

$$MDI(t) = \frac{Bioassay\ MDA}{IRF(t)}$$

$$Fecal\ MDA = 0.2\ dpm$$

$$MDI(t) = \frac{9 \times 10^{-5}\ nCi}{Fecal\ IRF(t)}$$

$$MDD = MDI(t) \times DCF$$

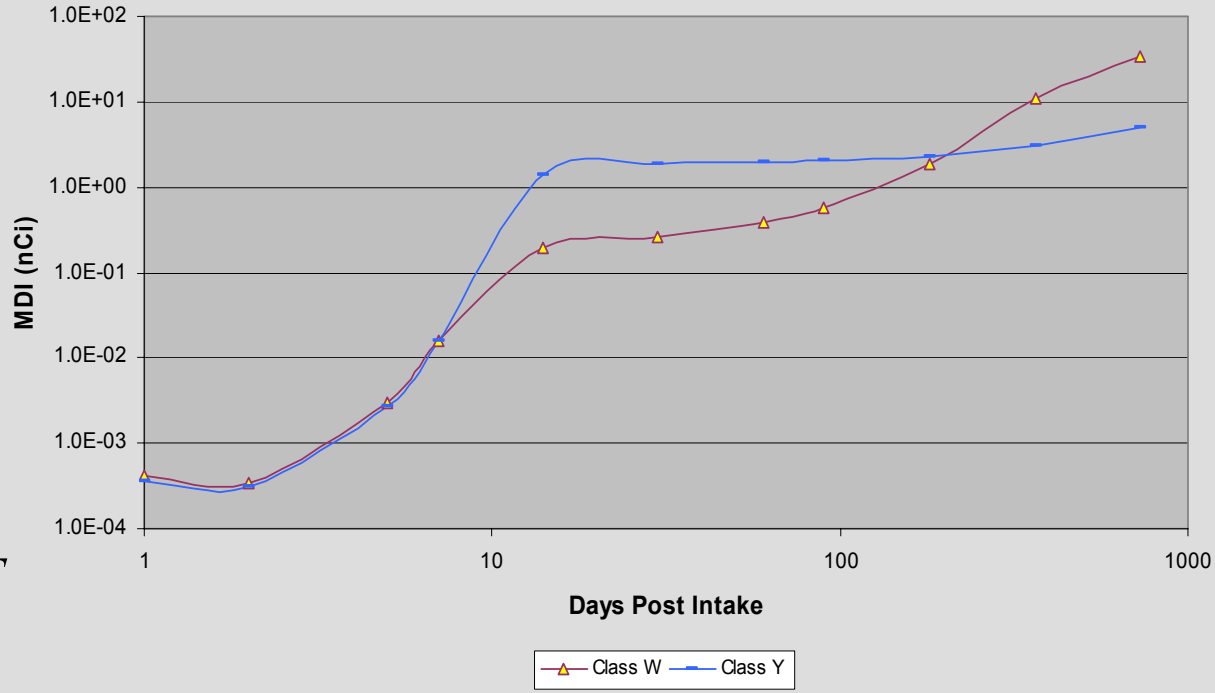

Minimum Detectable Dose (CEDE)
^{239}Pu Fecal Bioassay

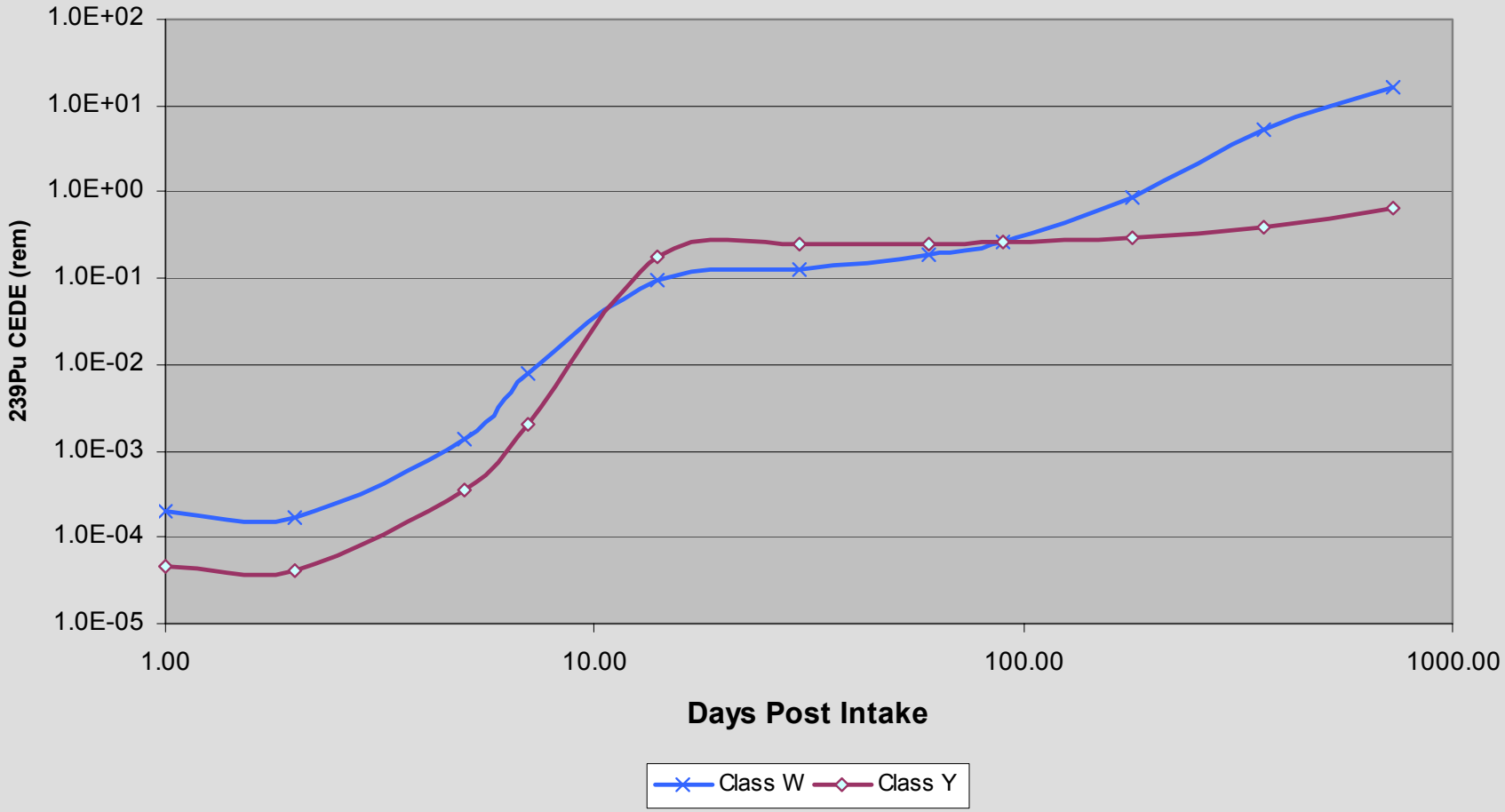

Minimum Detectable Dose (CEDE) for 20-y W.G. Pu 0.2 dpm/d Fecal Bioassay

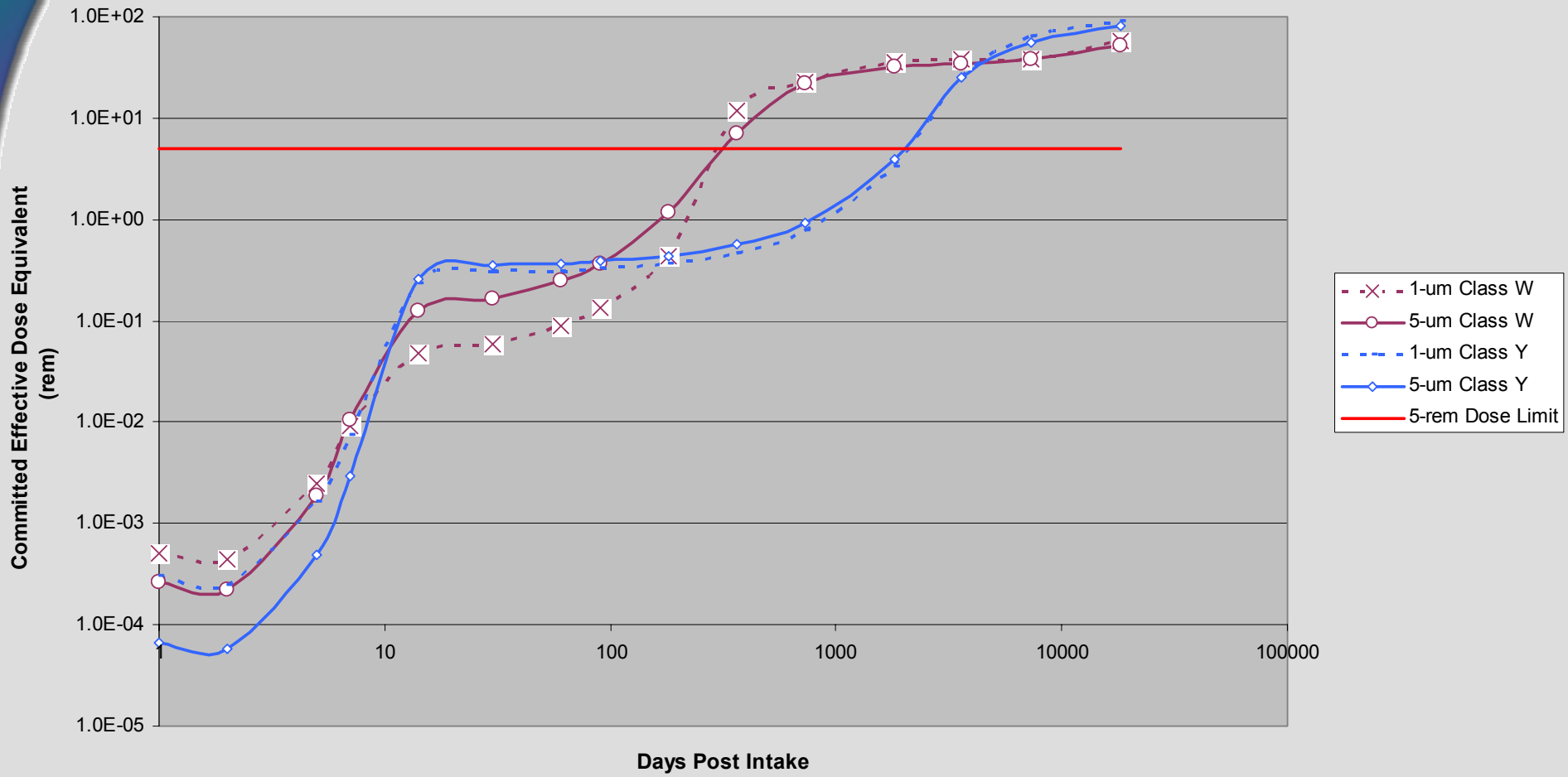

Minimum Detectable Dose (CEDE) for 20-y W.G. Pu 0.02 dpm/d Urine Bioassay

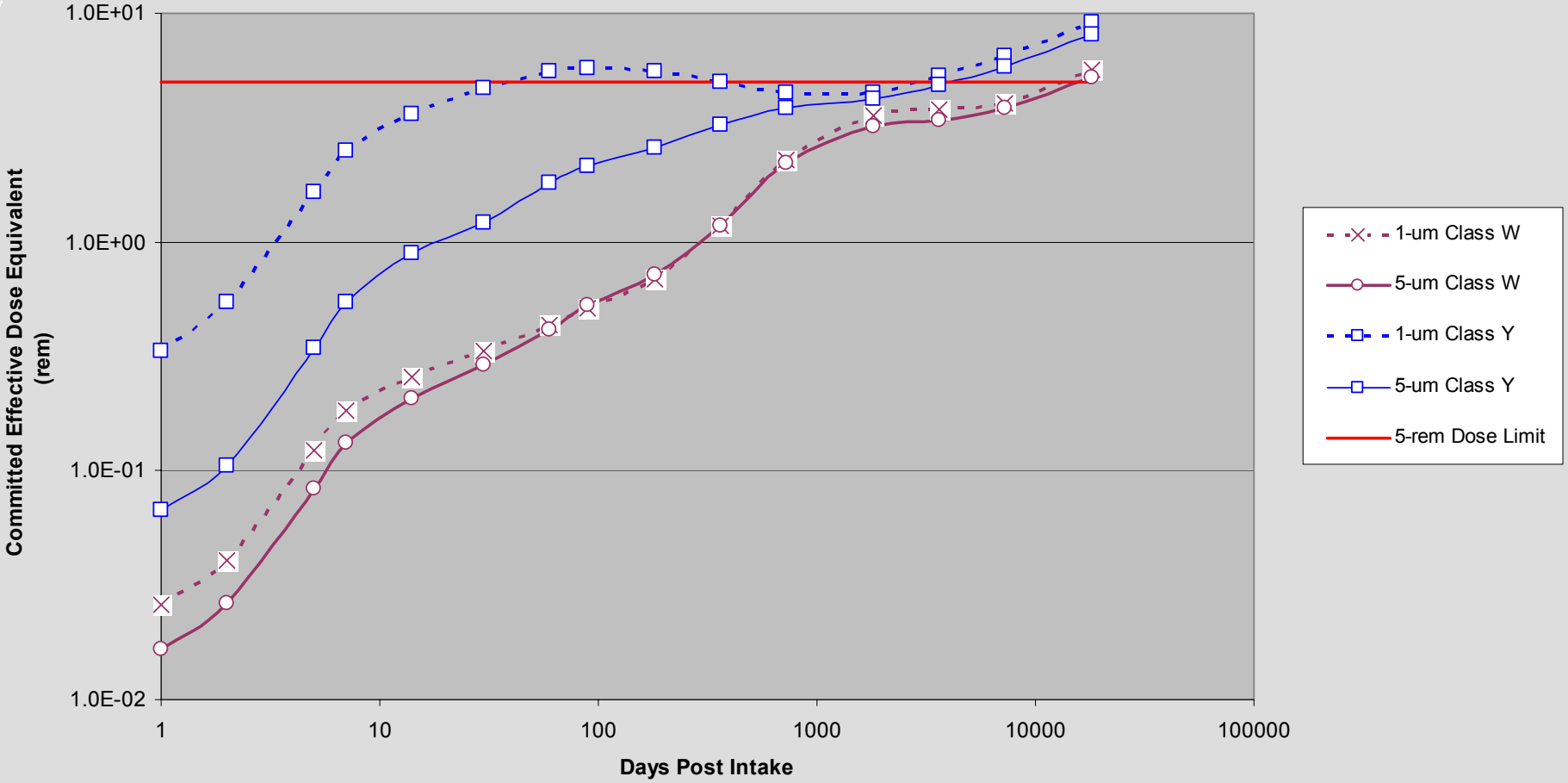

Minimum Detectable Dose (CEDE) for 20-y W.G. Pu 0.2 nCi ^{241}Am in Lung Count Bioassay

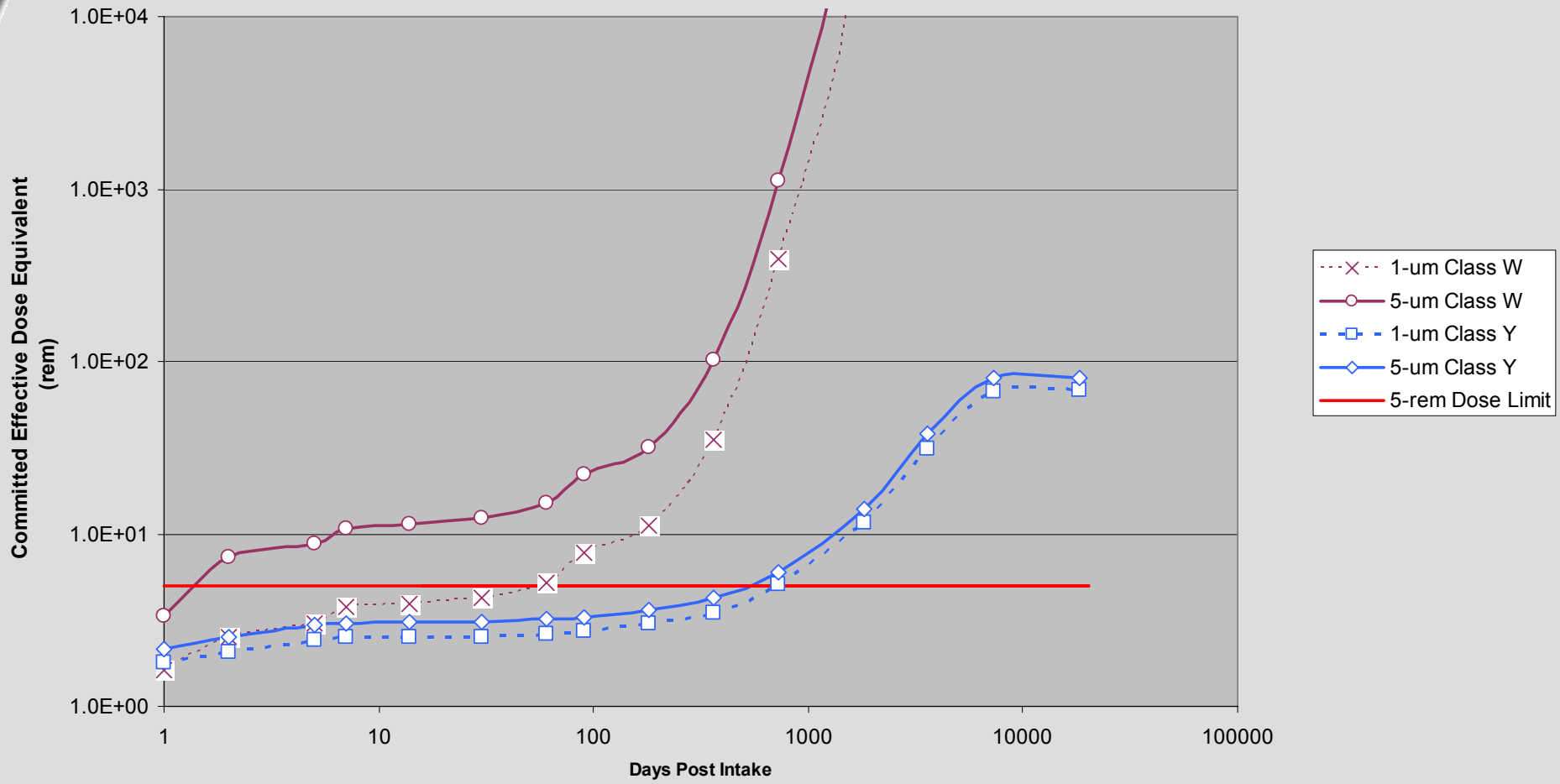

Air Sampling

A workplace control tool

- Fixed head sampling
- Grab sampling
- Lapel sampling
- Use DAC as basis for controls
- DAC-hours as indication of worker exposure

DAC-hours: a field indication of exposure to air concentration for a given time

$$DAC-hours = \frac{Air\ Concentration}{DAC} \times Exposure\ Time \times \frac{1}{PF}$$

$$DAC-hours = air\ sample\ activity \times \frac{2000\ DAC-h}{ALI} \times \frac{Breathing\ Rate}{Sampler\ Flow\ Rate} \times \frac{1}{PF}$$

DAC-hours: A surrogate for intake

$$Intake = DAC-hours \times DAC \times Breathing\ Rate$$

^{239}Pu *DAC-hours* to *Intake*

$$Intake = DAC-hours \times 2\times10^{-12}\ \mu Ci/ml \times 1.2\times10^{6}\ ml/h$$

$$Intake = [activity]\ \mu Ci$$

$$1\ DAC-hour = 2.4\times10^{-6}\ \mu Ci = 0.0024\ nCi$$

Simple Dose Calculation

$$Dose = Intake \times Dose\ Coefficient$$

Dose Coefficients for ^{239}Pu Inhalation rem/nCi

PNNL-MA-860 /(FGR No. 11)

	Class W		Class Y	
AMAD	1-µm	5-µm	1-µm	5-µm
Effective	0.44 (0.429)	0.48	0.31 (0.308)	0.13
Lung	0.061 (0.064)	0.022	1.1 (1.20)	0.40
Bone Surfaces	8.0 (7.81)	8.8	3.1 (3.04)	1.6

Converting 1 *DAC-hour* ^{239}Pu exposure to CEDE gives the following:

For 5-µm AMAD

- Class W: 1.15 mrem
- Class Y: 0.312 mrem

- Not : 2.5 mrem (40 DAC-h for 100 mrem)

  That factor works for Cs, Sr, but generally not actinides

- It is conservative to use 10 to 40 DAC-h as a basis for investigating intakes and recording doses
  - For actinides the exposure suggests dose from 3 mrem (for class Y-10 DAC-h) up to 45 mrem (class W – 40 DAC-h)

To sample or not?
Fecal MDI converted to *DAC-hours*

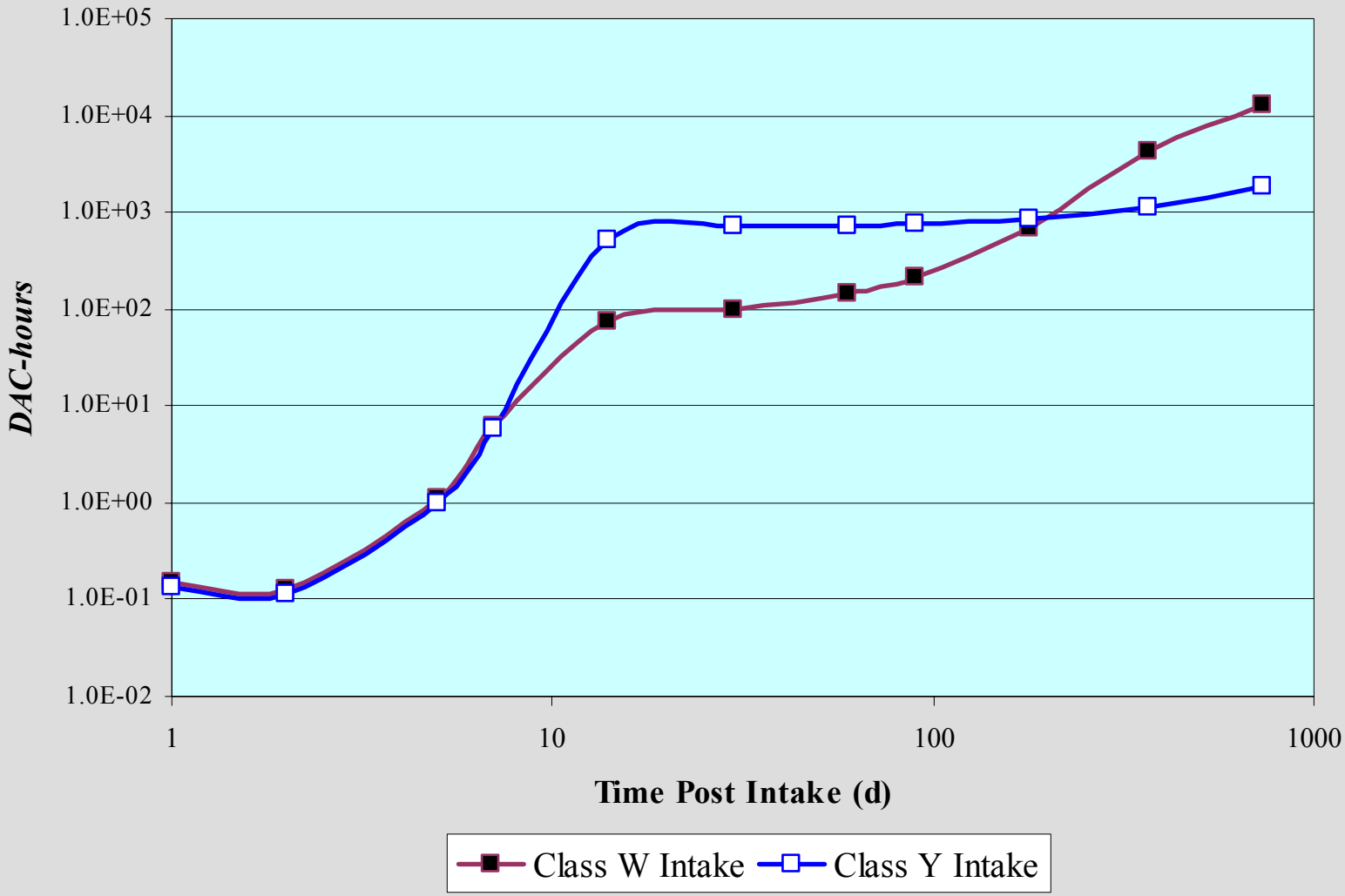

Recommended "Policy" – (PNL-MA-552) Basis for Pu DAC-hours Tracking

< 1 *DAC-hour*	OK to disregard	CEDE < 1.15 mrem
1-10 *DAC-hours*	Log but dose assignment is optional. Bioassay not needed	CEDE not likely to be >~10 mrem
10-40 *DAC-hours*	Dose assessment needed. Should consider bioassay	CEDE could be over 10 mrem
>40 *DAC-hours*	Dose assessment needed. Perform bioassay.	CEDE may be ~40 to 50 mrem.

Why 10-mrem???

- Selected in mid-late 1980s by Hanford Personnel Dosimetry Advisory Committee (HPDAC)
- A dose-based screening level for occupational exposure recording purposes, generally for routine monitoring programs.
- Consistent with occupational levels being 10 times higher than general public levels (at that time 5 rem vs 0.5 rem)

Why 10-mrem???

- Consistent with external dosimetry capability at that time (TLD lower limit of detection)
- 10 times the Negligible Individual Dose (annual dose) of NCRP 116 (and the earlier Negligible Individual Risk Level of NCRP 91). Occupational levels historically higher than nonoccupational.
- Has withstood the test of time

So Where Are We At? Regulation vs. Reality

10CFR835 - Control

- ICRP 30 lung model
- 1-µm AMAD
- ICRP 30 Part 1 Pu model
  - 50-y t_{bio} for liver
  - 100-y t_{bio} for bone surfaces
- DACs

  Class W = 2×10^{-12} µCi/ml

  (Class Y = 6×10^{-12} µCi/ml)
- 1 DAC-h = 2.4×10^{-6} µCi

  = ~0.3 to 1 mrem

Reality – Dose Assessment

- ICRP 30 lung model
- 5-µm AMAD
- ICRP 30 Part 4 Pu model
  - 20-y t_{bio} for liver
  - 50-y t_{bio} for bone surfaces
- Perform dose assessment for exposures (assume W)

  > 10 *DAC-hours*

  CEDE > 10 mrem.

  Class Y CEDE about 1/3 W

COMING IN MINUTES…

Part 2: The Contender

Super Class Y Pu

The Pu Reality Show – Part 2

The Contender:

Super Class Y

The Contender: Super Class Y

- Not recognized in ICRP 30
- Much more tenacious lung retention
- Hanford first used ca. 1986
- Empirical more than theoretical

Case: Han-1

- Spitz & Robinson 1981
  Actinides in Man and Animals, pp 115-125
- Carbaugh, Bihl, & Sula 1991.
  Rad. Prot. Dosim. 38(1/3) pp99-104
- Carbaugh & La Bone, 2003.
  Rad. Prot. Dosim. 105(1-4) pp133-138

Han-1 The Incident

- "Report of Investigation of the Employee Inhalation of Plutonium Dioxide on May 23, 1978" (June 1978 accident investigation report by Rockwell Hanford Operations.)

Han-1 The Incident – A Glove Rupture

- May 1978 – PFP (234-5Z) Room 145
- Fatigue crack(1-2 mm) in a glovebox glove
- Worker withdrew hand
- Contamination spread from crack

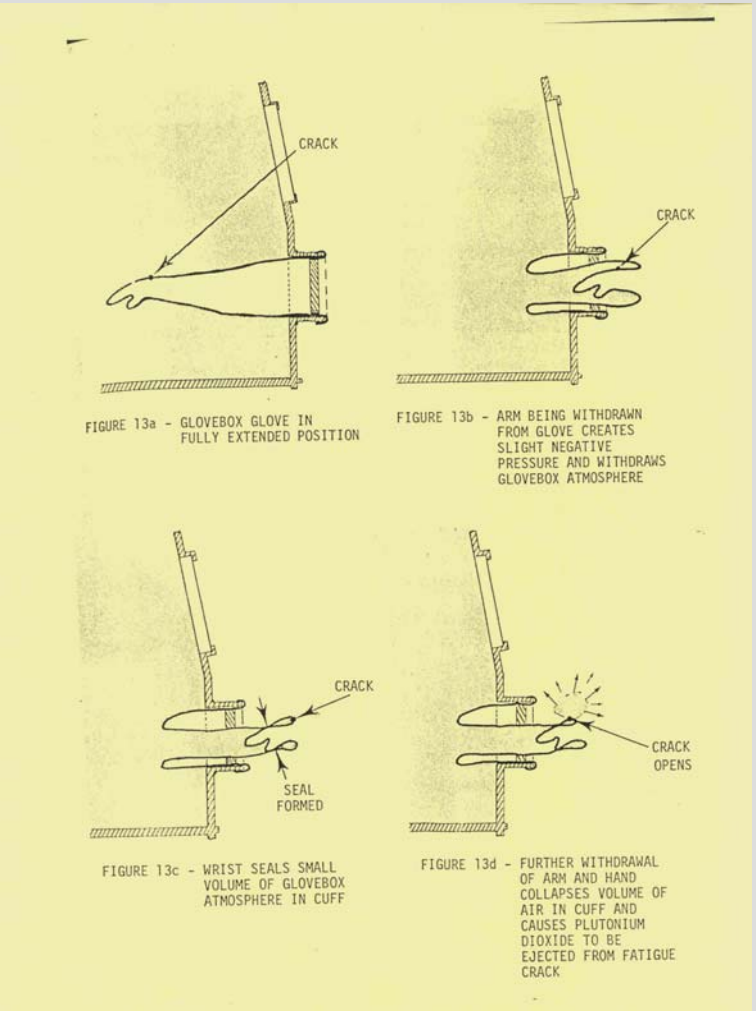

Han-1 The Incident – A Glove Rupture

Discovered by self-survey immediately following removal of hands from glovebox gloves.

Right surgeon's glove:	>40,000 dpm
Coveralls:	10,000 to 20,000 dpm
Right hand:	10,000 dpm
T-shirt:	1,000 to 2,000 dpm
1st Nasal Smears:	left/right: 320 / 240 dpm
2nd Nasal Smears:	55 / 15 dpm
3rd Nasal Smears:	15 / 15 dpm
Fixed head Air Sample (2.5 m from worker):	1.53×10^{-9} µCi/ml (765 DAC)
No Continuous Air Monitor in room	
Spots on floor to doorway:	5,000 to 20,000 dpm`

Han-1 The Incident
Initial Actions

- Deconned worker
- DTPA administered
  - 1-g Ca-DTPA first day
  - 0.5-g Ca-DTPA on days 2, 3, 7, and 10
- Urine sample collection
- In vivo counts (lung counts)
- Fecal sample collection

Han-1 The Material PuO_2

- Pu Oxide powder
- Calcined at 600°C
- Very well characterized by isotope

^{238}Pu-α	11.6 % of total-α activity
^{239}Pu-α	53.8 %
^{240}Pu-α	26.1 %
^{241}Am-α	8.4 %
^{241}Pu-β	1595 %

Han-1 Bioassay Data
Urine Data

- Early data affected by DTPA enhancement
- DTPA was relatively ineffective with regard to dose reduction, due to highly insoluble nature of material.

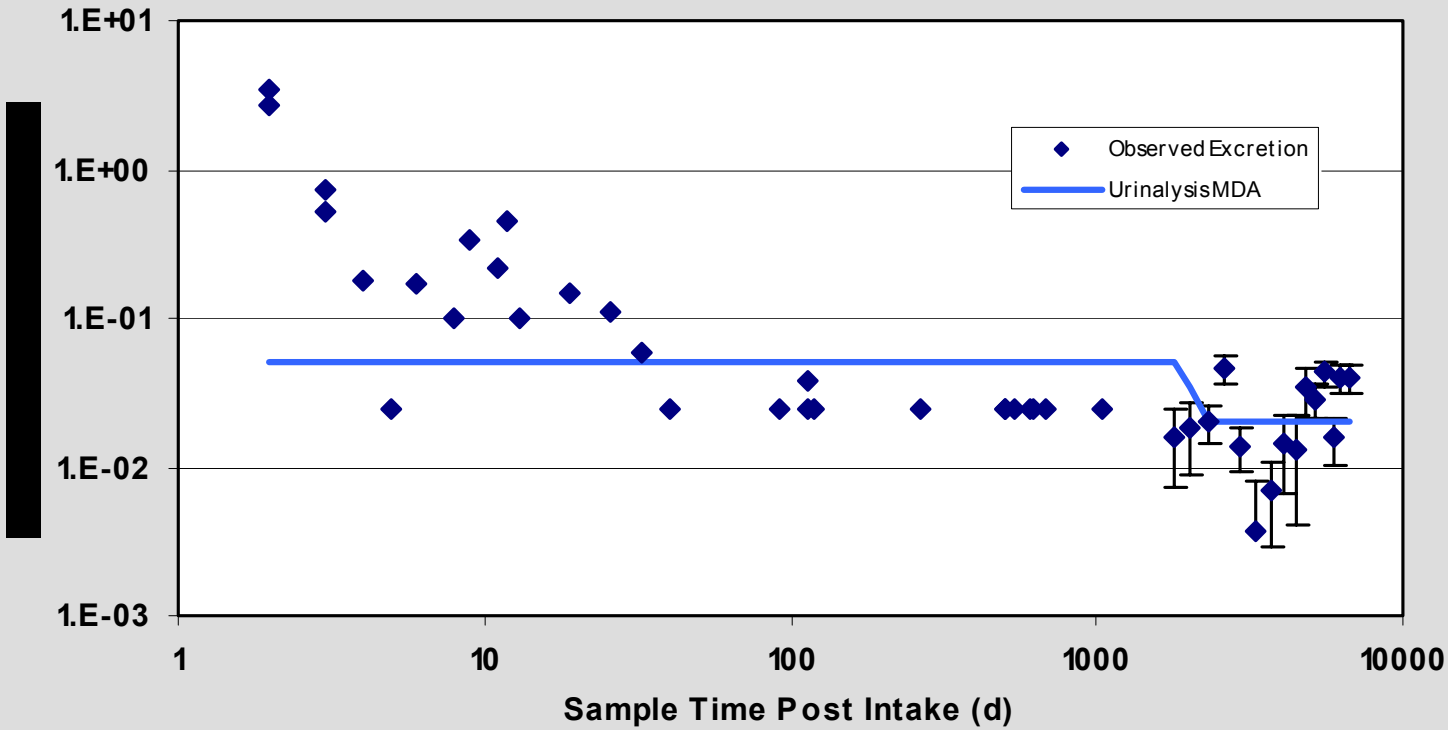

Han-1 Bioassay Data
Fecal Data

- Virtually all fecal clearance occurred in the first day's sample.
- Quickly dropped to below detection level and remained there even at very long times post intake

Day	^{239}Pu (dpm)
1	6380
3	11
4	10
5	15
6	9.6
280	0.44
609	<0.2
2261	<0.04

Han-1
Initial Long-term Lung Burden

Alpha Emitters (~11 nCi)

^{241}Am	0.93 nCi
$^{239+240}Pu$	8.7 nCi
^{238}Pu	1.2 nCi

Beta Emitter

^{241}Pu	160 nCi

Han-1 ^{241}Am Skeleton Burden

- By skull count
- No consistent detection with DL of 0.35 down to 0.2 nCi

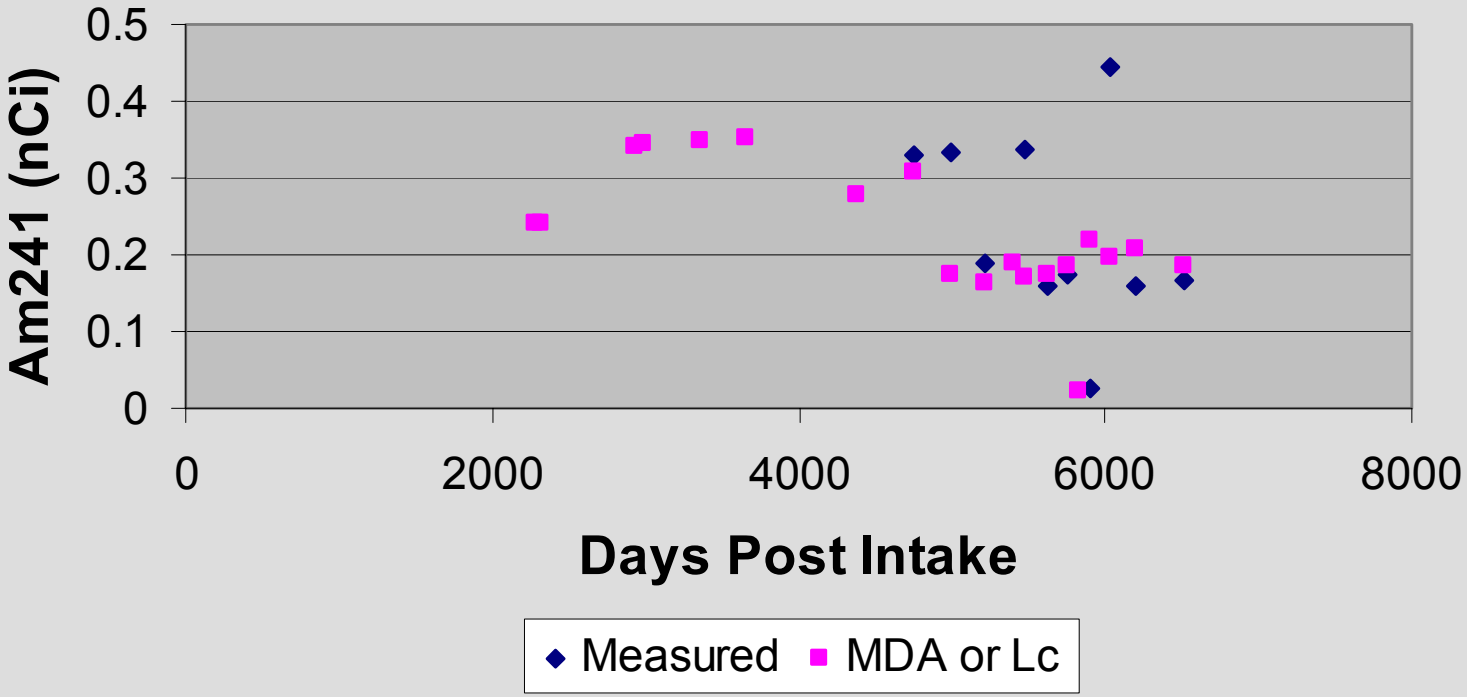

Han-1 ^{241}Am Liver Burden

- Liver – detection at 3500 dpi and following ~0.15 to 0.7 nCi
- True liver burden or interference from lung activity?

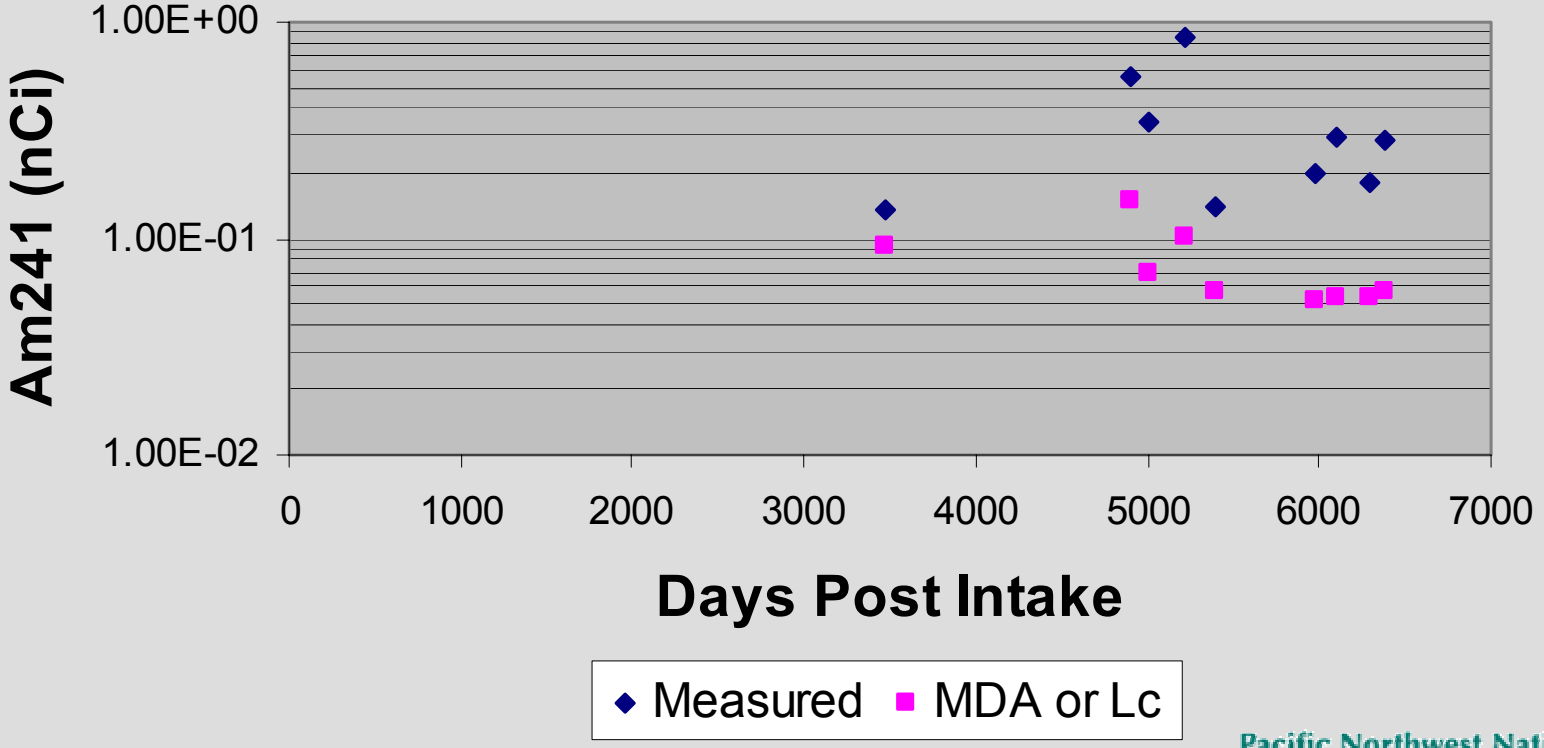

Han-1 ^{241}Am Lung Burden

- Lung counting – consistently detected with ingrowth
  ~1.3 nCi at *t* = 1 dpi ~4 nCi @ *t* = 6600 dpi (18 y)

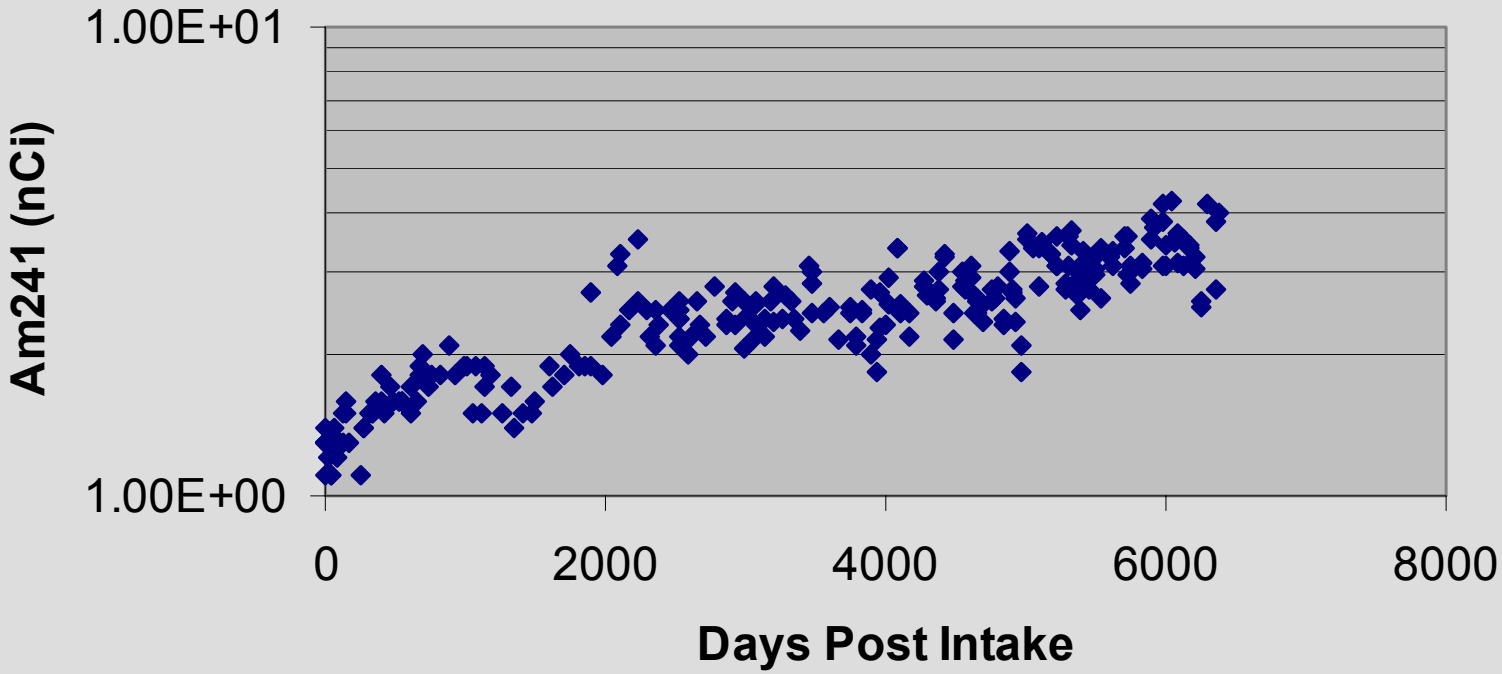

Han-1 ^{241}Am Lung Burden with Class Y Projection

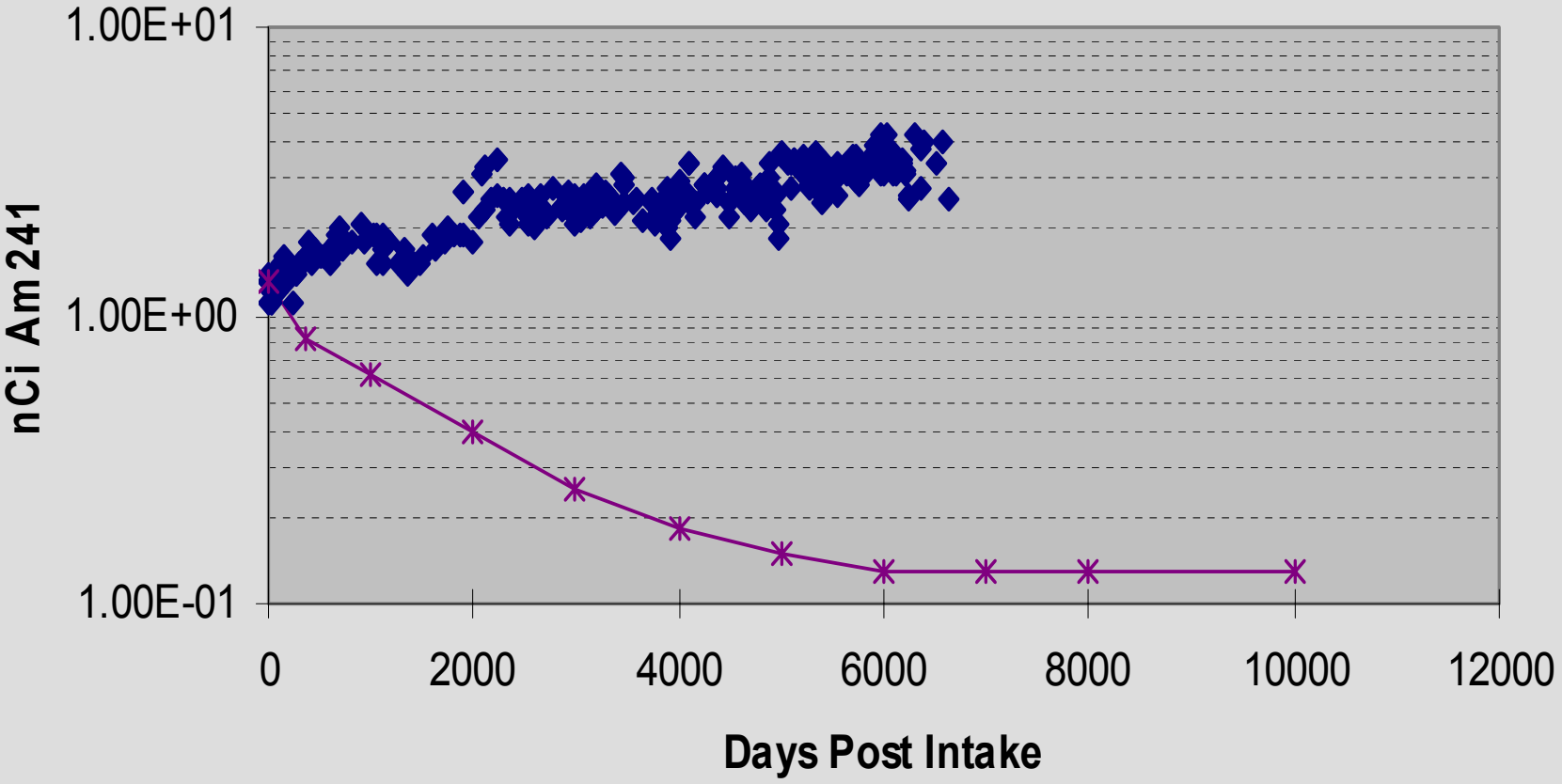

Han-1 Long-term Monitoring

- 19 years of regular follow-up until worker retired in 1997 and moved from area.

- Series of collimated lung counts in 1986 indicated activity retained in parenchymal tissue (i.e., broad lung tissue dispersion as opposed to T-B lymph nodes)

  Northcutt, Binney, & Palmer, 1988.

  Health Phys. 54(1) 73-81

Han-1 Lung Model

- Single compartment with a single biological half-life was as good a long-term model as any.
- Long-term clearance to blood (nothing showing up in feces)
- Physiological explanation:
  - No mechanical clearance after “early clearance”
  - “Transformed compartment” within lung tissue
  - Dissolution is only mechanism for clearance

Han-1 ^{241}Am Lung Burden

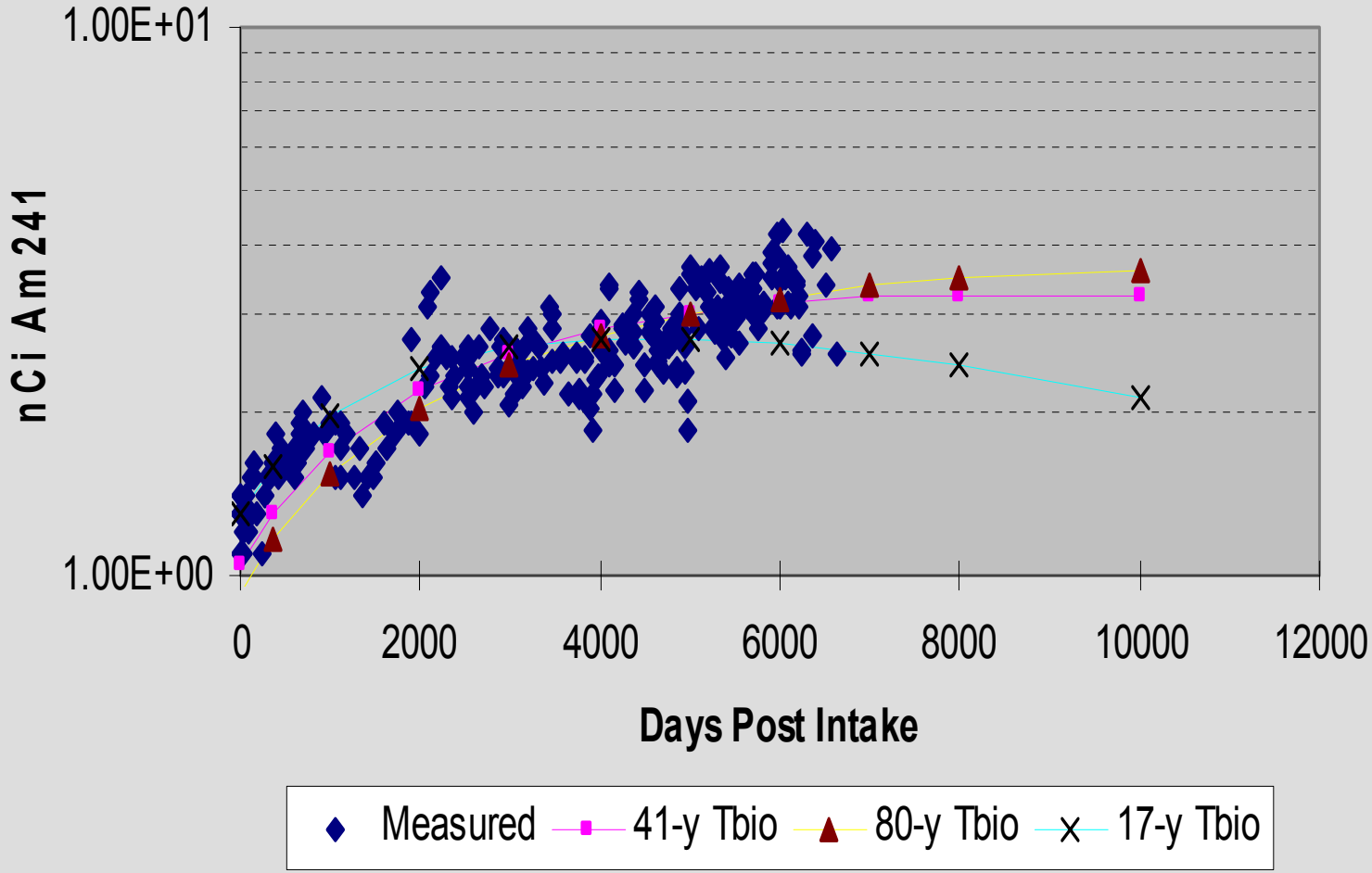

Han-1 Committed Dose Calculations

Organ/Tissue	Class Y	t_{bio} = 17y	t_{bio} = 80 y
Effective	20	110	140
Lung	75	780	1100
Bone Surfaces	220	290	220
Red Marrow	17	24	17
Liver	24	34	26
Gonads	2.9	3.7	2.7

Super Class Y – Unique to this case?

- Han-1 is a remarkable case with regard to data collection.
- The Hanford Super Class Y Club (1989)
  - Good candidate members: 10 with oxide exposure
  - Possibly qualified members: 30-50
  - Unpublished
- What about other sites?

Savannah River - Case SRS 498

- Sept 1999 inhalation exposure
- Handling “bagless” cans for transferring Pu metal
- Welded SST can for long-term Pu metal storage
- Defective weld
- Intake

^{241}Am:	10.8 nCi
Pu-alpha:	103 nCi
^{241}Pu	378 nCi

Savannah River - Case SRS 498

- Long-term t_{eff} >> 500 d

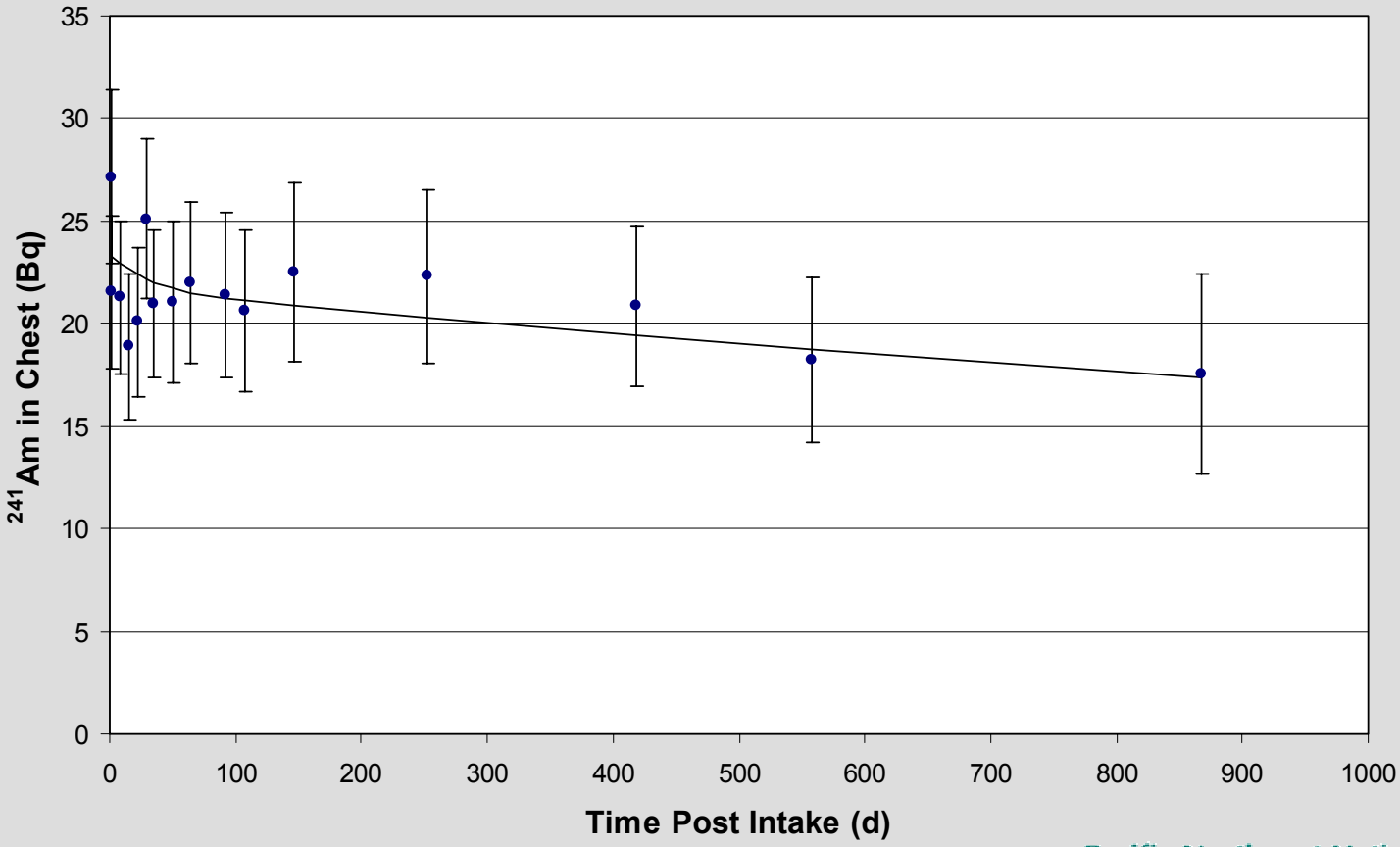

Savannah River - Case SRS 498

- Lab characterization showed much lower solubility than new lung model (ICRP 66) assumptions

Type	Fraction rapidly dissolved, f_r	Rapid solubility rate s_r (d^{-1}) (Half-time)	Slow solubility rate, s_s (d^{-1}) (Half-time)
***In vitro* Pu oxide from air sample**	0.0007	1.56 (0.44 d)	1.3×10^{-5} (146 y)
Inferred from bioassay	0.002	9.9 (0.07 d)	9.7×10^{-6} (196 y)
ICRP 66 Type S	0.001	100 (0.007 d)	1.0×10^{-4} (19 y)

Savannah River - Case SRS 498

Organ/Tissue	Type S	Super Type S
Effective	6.6 rem	7.7 rem
Lung	20 rem	53 rem
Bone Surfaces	41 rem	13 rem

Comparison: SRS & Han-1

Long-term Deposition	SRS-498	Han-1
^{241}Am	0.47 nCi	0.93 nCi
Pu-alpha	3.2 nCi	10.9 nCi
^{241}Pu	15.8 nCi	160 nCi
CEDE	7.7 rem	140 rem

Rocky Flats - 1965 Fire

- Small fire outside a glovebox caused dispersion
- Highly insoluble $^{239}PuO_2$ particles
- Very fine size: 0.3 µm MMD
- DTPA ineffective
- 25 workers had initial lung burdens >16 nCi
- 23 exhibited effective half-times > 5 y
- 14 exhibited effective half-times > 10 y
- Maximum effective half-time 50 to 250 y

Others supporting or indicating Super Class Y

- England (Winfrith Technology Centre)

  PP Foster 1991. *Rad. Prot. Dosim. 38*(1/3) pp 141-146

- India (Bhabha Atomic Research Centre)

  Surendran, et al., 1995. *Rad. Prot. Dosim.* 59(1) pp 15-24

The Contender – Super Class Y

- May not be as unusual as we originally though
- Appears to be oxide
- Occurs at high temperature oxidation
  - +600°C
- May also occur at low temperature oxidation
  - 1 year at 70°C --- especially disturbing

Changes to ICRP 30 Lung Model

5-µm AMAD

Compartment e,i

T (days) from 500 to 29,000 (80 y)

f_e from 0.05 to 1

Everything else as for class Y

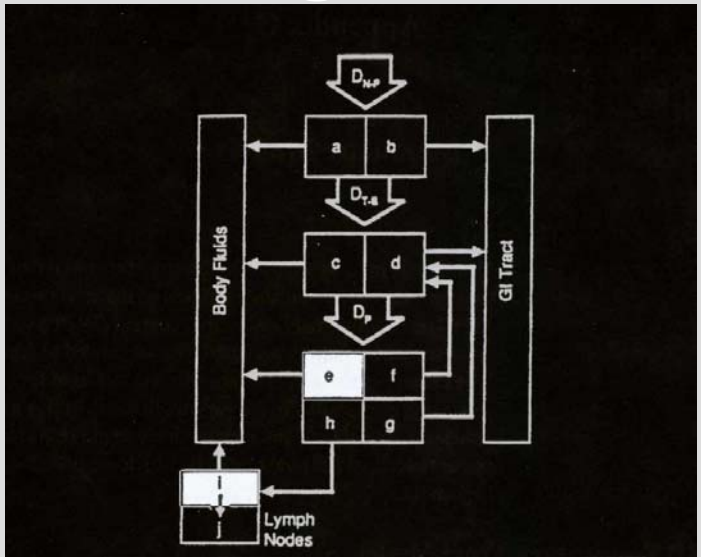

Region	Compartment	Class D T Days	Class D F	Class W T Days	Class W F	Class Y T Days	Class Y F
N-P (D_{N-P} = 0.30)	a	0.01	0.5	0.01	0.1	0.01	0.01
	b	0.01	0.5	0.40	0.9	0.40	0.99
T-B (D_{T-B} = 0.08)	c	0.01	0.95	0.01	0.5	0.01	0.01
	d	0.2	0.05	0.2	0.5	0.2	0.99
P (D_P = 0.25)	e	0.5	0.8	50	0.15	500	0.05
	f	n.a.	n.a.	1.0	0.4	1.0	0.4
	g	n.a.	n.a.	50	0.4	500	0.4
	h	0.5	0.2	50	0.05	500	0.15
L	i	0.5	1.0	50	1.0	1000	0.9
	j	-	0.0	-	0.0	-	0.1

R8812094 23 51

Comparison of ^{239}Pu Dose Coefficients 5-µm AMAD

Committed rem/nCi	Class W (PNNL-MA-860)	Class Y (PNNL-MA-860)	Han-1 Super Class Y
Effective	0.48	0.13	0.90
Lung	0.022	0.40	6.7
Bone Surfaces	8.8	1.6	1.8

Comparison of ^{239}Pu ALIs & DACs and Their Dosimetric Basis

	Class W	Class Y	Han-1 Super Class Y
ALI (µCi)	0.006 (FGR No. 11) Bone Surface	0.02 µCi (FGR No. 11) Bone Surface	0.0056 µCi Effective
DAC (µCi/ml)	2×10^{-12} (10 CFR 835) Bone Surface	6×10^{-12} (10 CFR 835) Bone Surface	1.87×10^{-12} Effective

Implications: Is Super Class Y a "Paper Tiger?"

- The Han-1 Super Y DAC calculated here is highly subjective.
  - But it is essentially identical to the current Class W DAC
  - Change from Nonstochastic DAC to Stochastic DAC
- Work place controls would not appear to be seriously impacted by Super Class Y. (Control is based on DAC, which is essentially unchanged.)
- Dosimetry changes ARE significant. CEDE is
  - >7× Class Y and ~2× Class W

Implications: Is Super Class Y a "Paper Tiger?"

- Urine bioassay is ineffective for Super Class Y
- Lung counting is highly effective but detection is at high dose levels
- Fecal sampling is effective early on but doesn't differentiate Super Y from Y

Implications: Is Super Class Y a "Paper Tiger?"

- Knowledge of the material to which worker is exposed becomes key. Dissolution rate studies might be worthwhile.

- Greater importance on interpretation of *DAC-hours* for dosimetry.

New Rules – Wild Cards

- Change to advanced ICRP Models
  - IMBA Expert™ – DOE Edition Computer Code
  - ICRP 66 Human Respiratory Tract Model
  - Recycling metabolic models
  - ICRP 60 tissue weighting factors, w_T

	ICRP 78 ^{239}Pu *e(50)*		Current Values
Type M:	0.12 rem/nCi	W:	0.48 rem/nCi
Type S:	0.0.031 rem/nCi	Y:	0.13 rem/nCi

New Rules – Wild Cards

- ICRP 78 *e(50)* based *ALIs* & *DACs*
- *ALIs* & *DACs* based on 5 rem or 2 rem?
- ^{239}Pu *DAC* for 5-rem and ICRP 78 *e(50)*

	Calculated	Current Values
Type M:	1.8×10^{-11} µCi/ml	(W: 2×10^{-12} µCi/ml)
Type S:	6.8×10^{-11} µCi/ml	(Y: 6×10^{-12} µCi/ml)

The Winner is….?

- Hanford Internal Dosimetry is convinced Super Class Y is real and doesn't fit the ICRP 30 models.
- Work place controls look like they can adequately address Super Class Y concerns in the workplace.
- Definitive bioassay for Super Class Y is problematic.
- Dosimetry for Super Class Y is significantly different than for Classes W or Y.
- May have to rely on assumptions about material or dissolution rate studies to identify Super Class Y.
- What do you think?